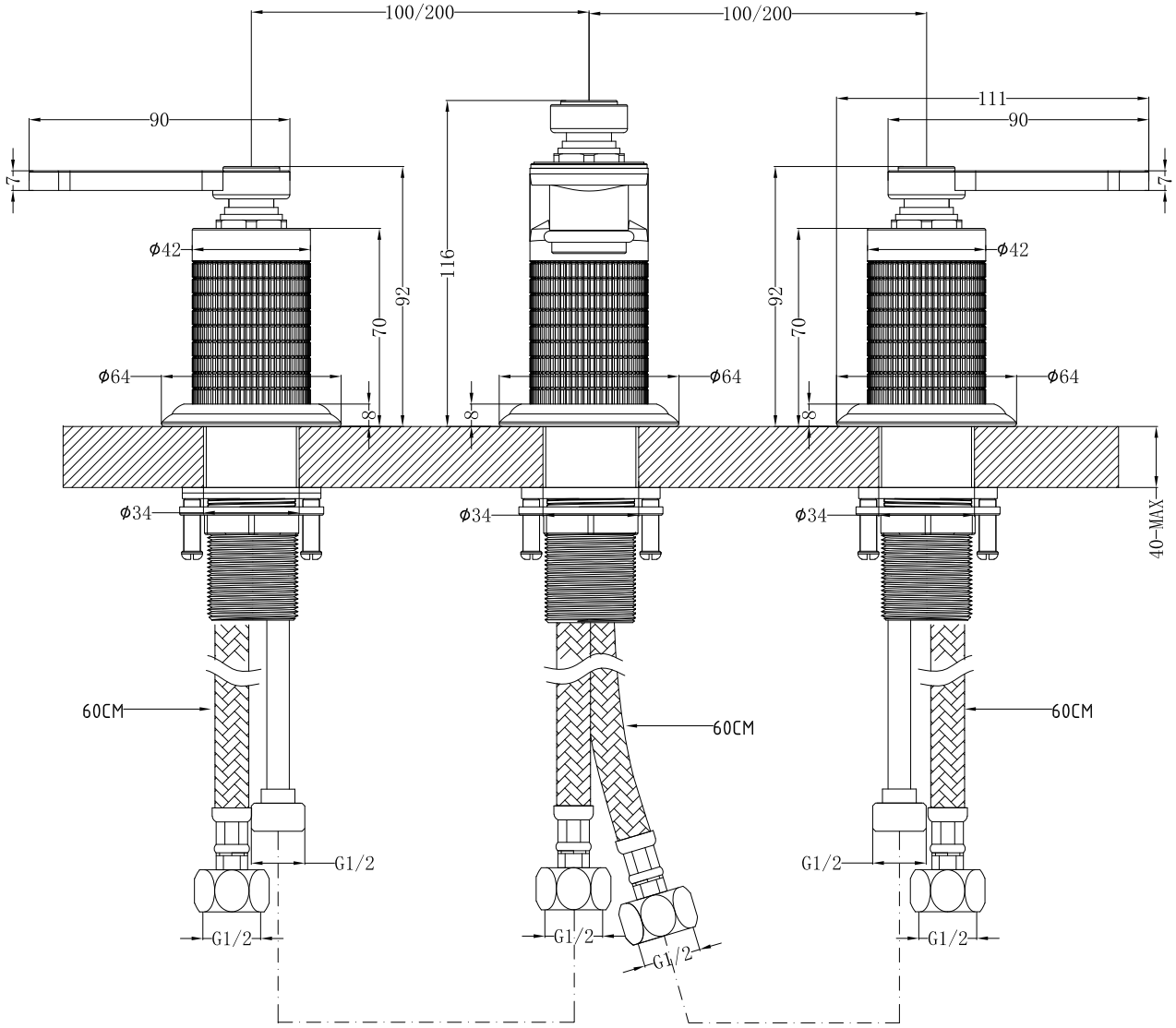
100/200
100/200
90
7
ϕ42
92
70
116
ϕ64
8
ϕ34
40-MAX
60CM
G1/2
111
90
7
ϕ42
92
70
ϕ64
8
ϕ34
60CM
G1/2
G1/2
G1/2
G1/2
ϕ42
ϕ64
8
ϕ34
60CM
G1/2
G1/2

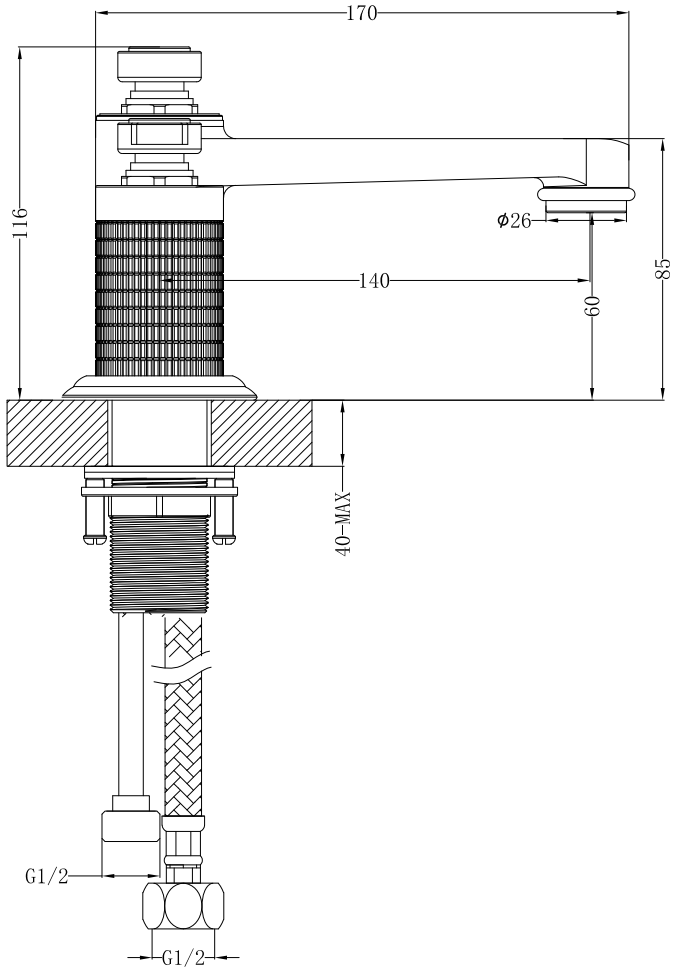
170
116
ϕ26
140
60
85
40-MAX
G1/2
G1/2